WF series compact cylinders

ATS PNEUMATICS | DOUBLE ACTING | FEMALE ROD THREAD

Compact magnetic cylinders for pushing, pulling and positioning where installation space is limited. Compressed air powers extension and retraction. The WF version has a **female threaded rod end**. Every made-to-order ATS cylinder is built in-house in Christchurch.

Specification	ATS WF made-to-order build
ATS bore sizes	25, 32, 40, 50 and 63 mm
Online strokes	Whole-mm custom lengths up to 300 mm; available price variations apply
Mounting standard	32-63 mm: ISO 21287; 25 mm: UNITOP-style dimensions
Working pressure	1-10 bar
Temperature	0 to +80 degrees C; -20 degrees C with dry air
Air supply	Filtered compressed air, lubricated or non-lubricated
Position sensing	Magnetic piston; slots for compatible sensors
Body and covers	Anodised aluminium
Piston rod	25 mm: AISI 303; 32-63 mm: chrome-plated C40 steel
Seals	PU rod and piston seals; NBR O-rings

This guide covers the five ATS bore sizes above. Manufacturer 20, 80 and 100 mm versions are outside this ATS online range. Catalogue common strokes and custom ATS builds are separate ranges.

Drawings for the two bore groups

Shared Aignep drawings: **left = WFM male rod**, **centre = WF female rod**, right = end view. Use the female rod view for this catalogue. Bare cylinder, rod retracted; drawings are schematic.

25 mm bore - UNITOP-style dimensions

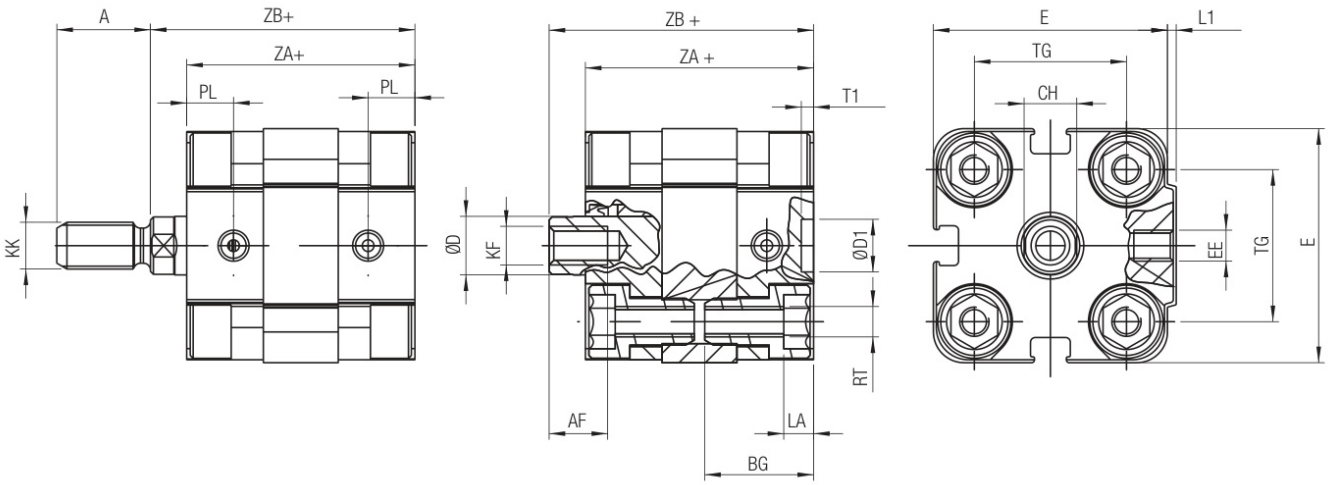

32, 40, 50 and 63 mm bores - ISO 21287

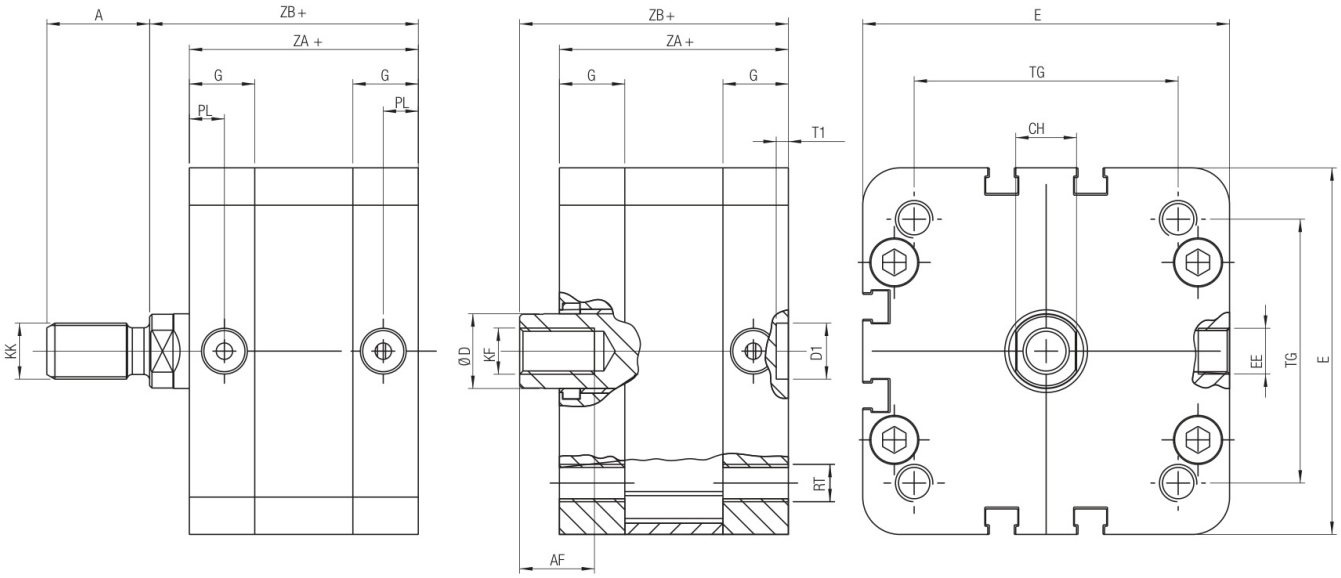

Add stroke to ZA and ZB only

For 50 mm bore x 125 mm stroke: **ZA = 45 + 125 = 170 mm**; **ZB = 53 + 125 = 178 mm**. Other reference dimensions stay fixed by bore.

ZA and ZB are the labelled drawing datums, not an interchangeable overall-length value. For WFM, the male rod projection A is shown separately. Do not use the hidden pricing-band number as the physical stroke.

Bore-specific dimensions

Numeric dimensions in mm; thread designations retained. A dash means the reference is not applicable. Values for ZA and ZB are bases: add the exact stroke.

Drawing reference	25 mm bore	32 mm bore	40 mm bore	50 mm bore	63 mm bore
D - rod diameter	10	12	12	16	16
E - end-cap size	40	49	55	68	78.5
L1	1.5	-	-	-	-
CH - rod flats	9	10	10	13	13
RT - mounting thread	M5	M6	M6	M8	M8
G	-	14.5	15	14.5	14
TG - mounting centres	26	32.5	38	46.5	56.5
EE - air port	M5	G 1/8	G 1/8	G 1/8	G 1/8
PL	8	7.5	7.5	7.5	7.5
D1 - through hole	6	9	9	12	12
T1	4	2.1	2.1	2.6	2.6
ZA base (+ stroke)	39	44	45	45	49
ZB base (+ stroke)	45.5	51	52	53	57.5
BG	18.5	-	-	-	-
LA	5	-	-	-	-
KF - female rod thread	M6	M8	M8	M10	M10
AF - thread depth	10	12	12	16	16

Rod connection and mounting are different threads

The rod connection is **KF** for WF. RT identifies the mounting attachment thread. EE identifies the air-port thread. They are separate interfaces and must be matched to the accessory or fitting.

Example: WF 25 mm bore uses M6 female rod thread (KF), with 10 mm depth (AF). It does not use the M8x1.25 external thread shown on the male-rod view.

The two bore-group drawings and complete table are taken from Aignep W catalogue page 18.109.

Force and air consumption

Manufacturer pneumatic force references (N)

Bore	Movement	1 bar	2 bar	4 bar	6 bar	8 bar	10 bar
25	Extension	44	88	176	264	352	440
25	Retraction	36	72	144	216	288	360
32	Extension	72	144	288	432	576	720
32	Retraction	62	124	248	372	496	620
40	Extension	110	220	440	660	880	1100
40	Retraction	100	200	400	600	800	1000
50	Extension	175	350	700	1050	1400	1750
50	Retraction	155	310	620	930	1240	1550
63	Extension	280	560	1120	1680	2240	2800
63	Retraction	260	520	1040	1560	2080	2600

Aignep catalogue references, not guaranteed application outputs. Friction, air-flow restriction, pressure loss, exhaust backpressure and load affect usable force. The table differs from ideal piston area x pressure calculations.

Air-use reference at 6 bar (Nl per 10 mm stroke)

Bore	Extension	Retraction	Both directions
25	0.034	0.029	0.063
32	0.056	0.048	0.104
40	0.088	0.080	0.168
50	0.137	0.123	0.260
63	0.218	0.204	0.422

Multiply the combined value by exact stroke / 10 for one full extend/retract cycle, then by cycles/minute. For 50 mm bore x 125 mm stroke at 6 bar: (0.137 + 0.123) x 12.5 = **3.25 Nl/cycle**.

These rounded catalogue values cover swept chamber volume. Tubing, dead volume, valves and leaks add consumption. No single-acting spring-load table applies to WF/WFM.

Selection, accessories and ordering

Common lengths and your exact stroke

Choose a common stroke button or enter your required whole-mm stroke within the online range. All ATS made-to-order lengths, including common choices, are manufactured in-house. ATS online builds extend to 300 mm, subject to available price variations.

Manufacturer common lengths for 25 mm bore are 5, 10, 15, 20, 25, 30, 40 and 50 mm. The 32/40 mm products additionally list 60, 80, 100, 125 and 150 mm; 50/63 mm products also list 200 mm. Longer and intermediate ATS lengths are custom builds.

Mountings and sensors

Select compatible mountings shown after bore selection. They are priced separately; more than one may be selected where required. Position sensors are additional items. Confirm sensor type, wiring and mounting arrangement with ATS.

The 25 mm mounting geometry differs from the ISO 21287 larger-bores group. Check RT, TG, through-hole diameter D1 and the correct rod thread before selecting or replacing accessories. Catalogue inclusion does not automatically mean an accessory is stocked.

Ordering and downloadable dimensions

WF-050-0125 identifies 50 mm bore x 125 mm finished stroke. The on-demand PDF uses that exact measurement and the correct bore-group drawing. The price may come from a hidden stroke band; the physical stroke stays as entered.

Manufacture and delivery

Standard production is usually **3-5 working days**, plus delivery. Urgent or same-day production is subject to workshop capacity and ATS confirmation. We supply throughout New Zealand.

Discuss load, speed, stroke, side-loading and mounting alignment with ATS where required. A listed price range is not an unsupported-stroke or load rating.

ATS Pneumatics Ltd
atspneumatics.co.nz | 03 377 4796

Technical sources

Supplied Aignep W catalogue: printed pages 18.102-18.106 and 18.109. Aignep B2B WF and WFM dimensional listings for the small and large bore groups, checked 14 October 2026. ATS bore/stroke range follows the existing made-to-order product setup.